□□r□□d□□□r□□□□P□□

□□□□ D□□

P□□□□□ _____

P□□□□□ □□□□□ _____

Tr□□□ _____

□□□ _____

CITY OF WILMINGTON NORTH CAROLINA

P□□□□□□r□□□□ • □□□□□r□□D□□□□

□PPR□V□D DR□□□□□□PL□□

D□□□□□□□□□□□□□□□P□r□ □□□□□□□□□□□□□□□□□□□□□□□□

□□□□d□□□□□□□□□□□□□□□□□□□□□□□□□□□□□□□□□□□□

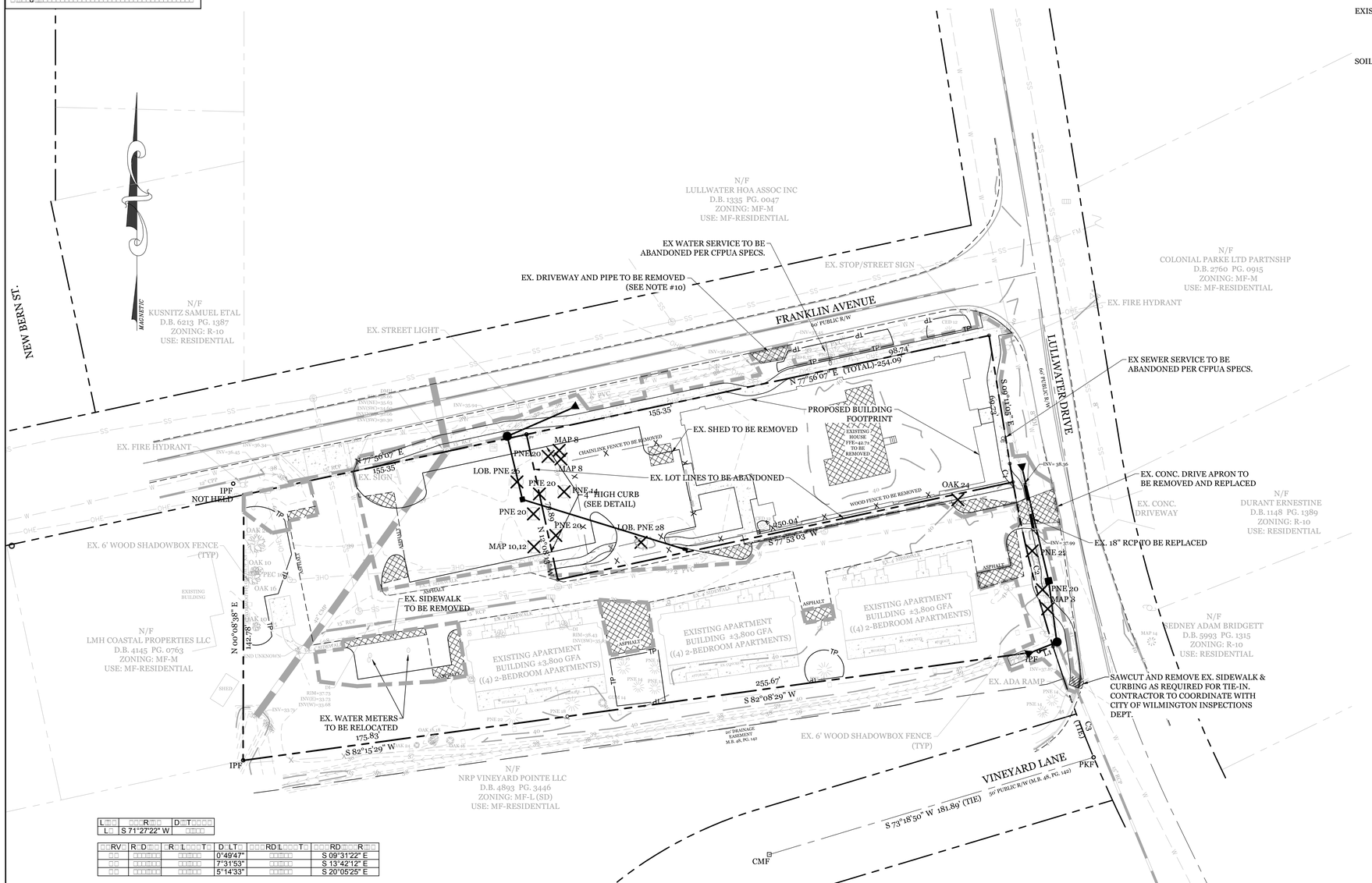

L□□	□□□R□□	D□T□□□
L□	S 71°27'22" W	□□□□

□□RV□	R□D□□□	□R□L□□□T□	D□LT□	□□□RD□L□□□T□	□□□RD□□□R□□
□□	□□□□□□	□□□□□	0°49'47"	□□□□□	S 09°31'22" E
□□	□□□□□□	□□□□□	7°31'53"	□□□□□	S 13°42'12" E
□□	□□□□□□	□□□□□	5°14'33"	□□□□□	S 20°05'25" E

NOTES:
1. EXISTING SURVEY DATA PROVIDED BY PARAMOUNT ENGINEERING.
2. NO WETLANDS EXIST ON SITE.
3. THIS PROPERTY IS NOT AFFECTED BY AN AEC.
4. NO CONSERVATION RESOURCES EXIST ON SITE.
5. THIS PROPERTY IS NOT AFFECTED BY ANY HISTORIC OR ARCHAEOLOGICAL SITES.
6. PRIOR TO ANY CLEARING, GRADING OR CONSTRUCTION ACTIVITY, A CONSTRUCTION ENTRANCE AND SILT FENCING SHALL BE INSTALLED.
7. PRIOR TO ANY CLEARING, GRADING OR CONSTRUCTION ACTIVITY, TREE PROTECTION FENCING WILL BE INSTALLED AROUND PROTECTED TREES OR GROVES OF TREES.
8. NO CONSTRUCTION WORKERS, TOOLS, MATERIALS OR VEHICLES ARE PERMITTED WITHIN THE TREE PROTECTION FENCING.
9. TREE PROTECTION SIGNAGE SHALL BE ADDED ALONG THE LIMITS OF DISTURBANCE ADJACENT TO TREES EVERY 100' TO PROTECT TREES ADJACENT TO THE CONSTRUCTION SITE.
10. WHEN THE USE OF ANY DRIVEWAY HAS BEEN PERMANENTLY DISCONTINUED, REPLACE ALL NECESSARY CURBS, GUTTERS, APRONS, SIDEWALKS, AND APPURTENANCES THERETO.

LEGEND

- PROPERTY LINE
- ADJOINERS
- TP — TREE PROTECTION FENCE
- LIMITS OF DISTURBANCE
- EX. EOP
- EX. FIRE HYDRANT
- TREES TO BE REMOVED
- PROPOSED DEMO. AREAS

30' 15' 0' 30' 60'

Scale: 1"=30'

SITE DATA

PARCEL ID:	R04919-008-026-000, R04919-008-025-000
CURRENT ZONING:	MF-M
CAMA LAND USE CLASSIFICATION:	URBAN
PROJECT ADDRESS:	202 LULLWATER DR. & 4912 FRANKLIN AVE. WILMINGTON, NC 28403
CURRENT OWNER:	RITZ PARTNERS 3, LLC. 1319 MILITARY CUTOFF RDSUITECC WILMINGTON, NC 28405
TOTAL ACREAGE IN PROJECT BOUNDARY	65,980 S.F. (± 1.51 ac.)
EXISTING ONSITE IMPERVIOUS AREAS:	
BUILDINGS:	7,434 S.F.
CONCRETE:	4,451 S.F.
ASPHALT:	13,272 S.F.
TOTAL:	25,157 S.F.
EXISTING ONSITE IMPERVIOUS AREAS TO BE REMOVED:	
BUILDINGS:	1,485 S.F.
CONCRETE:	177 S.F.
ASPHALT:	1,981 S.F.
TOTAL:	3,643 S.F.
SOIL TYPE:	Mu (Murrville fine sand) 93.1% JO (Johnston soils) 5.6% Le (Leon sand) 1.9% *(Per the USDA websoil survey map)*

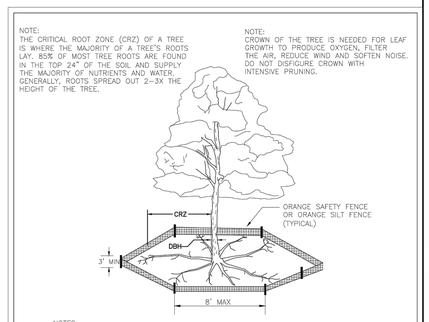

NOTES:
1. PROTECT CRITICAL ROOT ZONE (CRZ) OF TREES PRIOR TO CONSTRUCTION. CLEARLY MARK THE TREES AND ERECT A PROTECTIVE BARRIER AT THE CRZ. BARRIER SHALL BE MAINTAINED UNTIL CONSTRUCTION IS COMPLETE.
2. CRZ RADIUS IS 1 FT PER INCH OF TREE DIAMETER AT BREAST HEIGHT (DBH).
3. IF CONSTRUCTION OCCURS WITHIN THE CRZ, AT LEAST 12" OF MULCH AND/OR LOGGING MATTS SHALL BE PLACED WHERE MACHINERY MANEUVERS TO REDUCE SOIL COMPACTION IN THIS ZONE.
4. WHERE SIDEWALKS AND PATHWAYS PASS WITHIN CRZ, EXTRA CARE SHALL BE TAKEN TO AVOID DAMAGE TO THE ROOTS. ALTERNATE CONSTRUCTION METHODS, SUCH AS A REINFORCED SIDEWALK, SHALL BE IMPLEMENTED AS NECESSARY.
5. FOR ALL TREES, CUTTING OF LARGE STRUCTURAL ROOTS LOCATED NEAR THE BASE OF THE TRUNK IS PROHIBITED. DO NOT COMPACT SOIL BENEATH TREES. NO VEHICLE SHALL BE ALLOWED TO PARK UNDER TREES. NO MATERIALS OR EQUIPMENT SHALL BE STORED BENEATH TREES. DAMAGING THE BARK WITH LAWNMOWERS, CONSTRUCTION EQUIPMENT, OR ANYTHING ELSE IS PROHIBITED. CONTRACTOR SHALL REPAIR DAMAGE TO TREES.
6. FAILING TO INSTALL OR MAINTAIN PROTECTION MEASURES SHALL RESULT IN A STOP WORK ORDER AND FINE OF $500/DAY. DISTURBANCE OTHER THAN THAT ALLOWED ON THE APPROVED PLAN WILL REQUIRE OWNER TO POST A LETTER OF CREDIT FOR 3 YRS FOR TREE MITIGATION.

DATE: JAN, 2015	STANDARD DETAIL	CITY OF WILMINGTON NORTH CAROLINA
DRAWN BY JSR	TREE PROTECTION DURING CONSTRUCTION	CITY OF WILMINGTON ENGINEERING PO BOX 1810 WILMINGTON, NC 28402 (910) 341-7807
CHECKED BY RDG, P.E.	SHEET 1 of 2	SD 15-09
SCALE NOT TO SCALE		

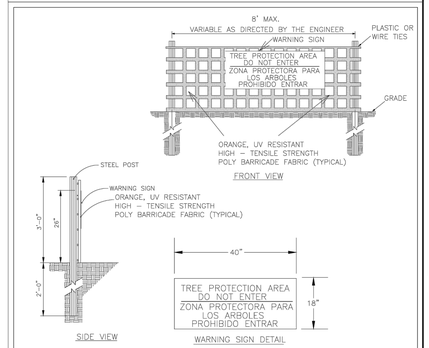

NOTES:
1. THE TREE PROTECTION FENCING SHALL NOT BE VIOLATED FOR THE ENTIRE DURATION OF THE PROJECT WITHOUT APPROVAL FROM URBAN FORESTRY STAFF.
2. WARNING SIGNS TO BE MADE OF DURABLE, WEATHERPROOF MATERIAL. LETTERS TO BE 3" HIGH, MINIMUM, CLEARLY LEGIBLE AND SPACED AS DETAILED.
3. SIGNS SHALL BE PLACED AT 50' MAXIMUM INTERVALS. PLACE A SIGN AT EACH END OF LINEAR TREE PROTECTION AND 50' ON CENTER THEREAFTER. FOR TREE PROTECTION AREAS LESS THAN 100' IN PERIMETER, PROVIDE NO LESS THAN TWO SIGNS PER PROTECTION AREA.
4. ATTACH SIGNS SECURELY TO FENCE POSTS AND FABRIC. MAINTAIN TREE PROTECTION FENCE AND SIGNS THROUGHOUT DURATION OF PROJECT.
5. TREE PROTECTION FENCING AND SIGNAGE SHALL BE REMOVED AFTER CONSTRUCTION.
6. ADDITIONAL SIGNS MAY BE REQUIRED BY CITY OF WILMINGTON, BASED ON ACTUAL FIELD CONDITIONS.

DATE: JAN, 2015	STANDARD DETAIL	CITY OF WILMINGTON NORTH CAROLINA
DRAWN BY JSR	TREE PROTECTION DURING CONSTRUCTION	CITY OF WILMINGTON ENGINEERING PO BOX 1810 WILMINGTON, NC 28402 (910) 341-7807
CHECKED BY RDG, P.E.	SHEET 2 of 2	SD 15-09
SCALE NOT TO SCALE		

VICINITY MAP (NOT TO SCALE):

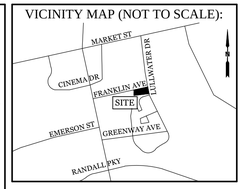

REVISIONS

INTRACOASTAL ENGINEERING, PLLC
5725 Oleander Dr. Unit E-7
Wilmington, North Carolina 28403
Phone: 910.859.8983
Email: Charlie@intracoastalengineering.com
License Number: P-0662

EXISTING CONDITIONS / TREE REMOVAL & PROTECTION PLAN

FOR

FRANKLIN FOREST PHASE-II

4912 Franklin Ave. & 202 Lullwater Dr.
CITY OF WILMINGTON
NEW HANOVER COUNTY, NC

NORTH CAROLINA PROFESSIONAL SEAL 032555 ENGINEER CHARLIE D. CALER JR.

PRELIMINARY NOT FOR CONSTRUCTION

CLIENT INFORMATION:

Ritz Partners 3, LLC.
Matt Scharf
1319-CC Military Cutoff Rd #172
Wilmington, NC 28405
Ph. 910-538-9901

DRAWN:	JAE	SHEET SIZE:	24X36
CHECKED:	CDC	DATE:	2/8/2021
APPROVED:	CDC	SCALE:	1" = 30'
PROJECT NUMBER:	2020-025		

DRAWING NUMBER:

C-o

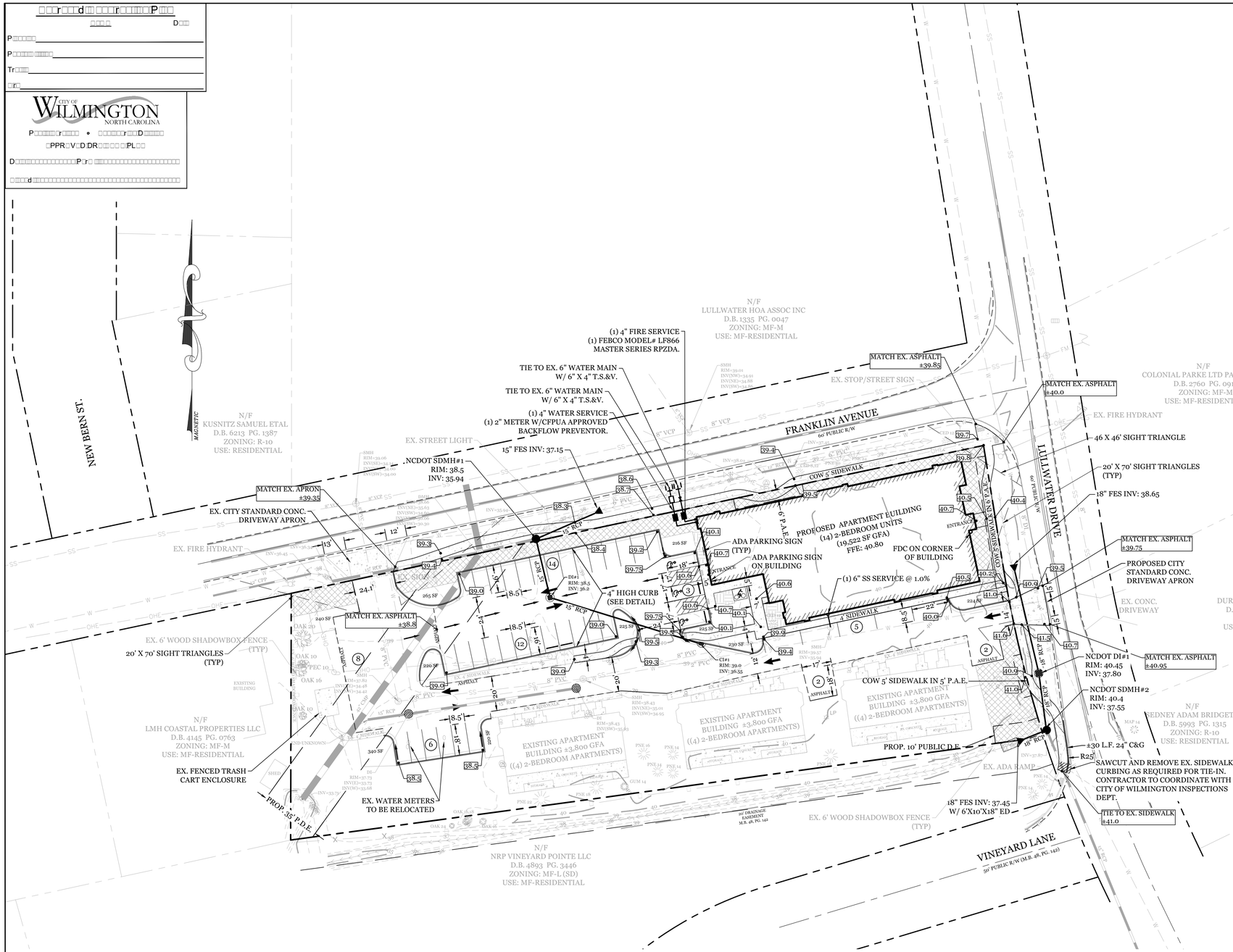

CITY OF WILMINGTON
NORTH CAROLINA

P□□□□□□ r□□□□ • □□□□□□ r□□D□□□□□

□PPR□V□D DR□□□□□□PL□□

D□□□□□□□□□□□□□□□□P□r□ □□□□□□□□□□□□□□□□□□□□□□□□

□□□□d □□□□□□□□□□□□□□□□□□□□□□□□□□□□□□□□□□□□

P□□□□□□

P□□□□□□ □□□□□□

Tr□□□□

□□□:

D□□□

□□□r□□□d□□ □□□r□□□□□□P□□□

□□□□ D□□□

SITE DATA

PARCEL ID:	R04919-008-026-000, R04919-008-025-000
CURRENT ZONING:	MF-M
CAMA LAND USE CLASSIFICATION:	URBAN
PROJECT ADDRESS:	202 LULLWATER DR. & 4912 FRANKLIN AVE. WILMINGTON, NC 28403
CURRENT OWNER:	RITZ PARTNERS 3, LLC. 1319 MILITARY CUTOFF RDSUITECC WILMINGTON, NC 28405
TOTAL ACREAGE IN PROJECT BOUNDARY	65,980 S.F. (± 1.51 ac.)
TOTAL DISTURBED AREA:	0.86 ACRES
NUMBER OF EXISTING BUILDINGS:	3
NUMBER OF PROPOSED BUILDINGS:	1
NUMBER OF EXISTING RESIDENTIAL UNITS:	12 @ 2 BEDROOMS
NUMBER OF PROPOSED RESIDENTIAL UNITS:	14 @ 2 BEDROOMS
EXISTING BUILDING SIZE IN GFA:	11,400 S.F. (3,800 S.F. EACH BUILDING/ 1,900 S.F. PER FLOOR)
PROPOSED BUILDING SIZE IN GFA:	19,522 S.F. (9,761 S.F. PER FLOOR)
EXISTING & PROPOSED BUILDING HEIGHT:	±'20 / 2 STORY (35' MAX. ALLOWED)

PROPOSED BUILDING SETBACKS:

FRONT:	REQUIRED= 0'	PROPOSED= 12.0'
SIDE:	REQUIRED= 0'L/20'R	PROPOSED= 6.5'/0.5'
REAR:	REQUIRED= 25'	PROPOSED= 83.5'

CALCULATION FOR BUILDING COVERAGE:
PROPOSED COVERAGE 15,712 S.F. ÷ 65,980 S.F. = 23.8%

PROPOSED ON-SITE IMPERVIOUS AREAS:
BUILDING ROOF 9,763 S.F.
CONCRETE SIDEWALK 1,465 S.F.
ASPHALT PARKING 9,670 S.F.
FUTURE 480 S.F.
TOTAL 21,378 S.F (32.4%)

TOTAL SITE IMPERVIOUS AREA:
EX. TO REMAIN: 21,514 S.F.
PROP. IMP. AREAS: 21,378 S.F.
TOTAL: 42,892 S.F. (65.0%)

PROPOSED OFF-SITE IMPERVIOUS AREAS:
CONC. SIDEWALK /DRIVEWAY APRON 3,150 S.F.

PARKING REQUIRED:
MIN: 2 SPACES/ 2 BEDROOM UNIT= 52 SPACES
MAX: 2.5 SPACES/UNIT= 65 SPACES

PARKING PROVIDED: 52 SPACES (3 H.C.)

BICYCLE PARKING REQUIRED: (MIN. 5 PER 25-125 VEHICLE SPACES)
REQUIRED: 5 SPACES
PROVIDED: 5 SPACES

FOUNDATION PLANTINGS:
WEST FACADE: 70 LF X 20' FACADE X 12%
REQUIRED: 168 S.F.
PROVIDED: 170 S.F.

SOUTH FACADE: 152 LF X 20' FACADE X 12%
REQUIRED: 365 S.F.
PROVIDED: 370 S.F.

STREETYARD REQUIREMENT:
LULLWATER DR. 18' (9' MIN & 27' MAX WIDTH)
REQUIRED: 170.85'-15'= 155.85' X 18'= 2,805 S.F.
PROVIDED: 2,825 S.F.

FRANKLIN AVE. 9' (4.5' MIN & 13.5' MAX WIDTH)
REQUIRED: 409.44'-24.6'= 384.84' X 9'= 3,464 S.F.
PROVIDED: 3,483 S.F.

OPEN SPACE REQUIREMENT: (35% of site)
REQUIRED: .35 X 1.51 Acres= 0.53 AC.
PROVIDED: 0.53 AC.

RECREATION AREA REQUIREMENT: (Min. 50% of Open Space)
REQUIRED: .5 *.53 Acres= 0.265 AC. (0.133 AC. MIN. ACTIVE REC. AREA)
PROVIDED: 0.34 AC. (0.18 AC. ACTIVE REC. AREA)

ESTIMATED TRIP GENERATION:
26 RESIDENTIAL UNITS (ITE CODE 220)
AM PEAK: 19 PM PEAK: 25 DAILY: 180

EXISTING SEWER AND WATER DEMAND:= 2,880 GPD

PROPOSED SEWER AND WATER DEMAND: 6,240 GPD

VICINITY MAP (NOT TO SCALE):

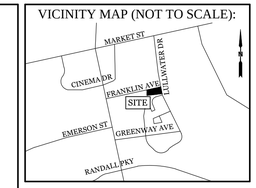

REVISIONS

INTRACOASTAL ENGINEERING, PLLC
5725 Oleander Dr. Unit E-7
Wilmington, North Carolina 28403
Phone: 910.859.8983
Email: Charlie@intracoastalengineering.com
License Number: P-0662

SITE, GRADING, DRAINAGE, STORMWATER, & UTILITIES PLAN
FOR
FRANKLIN FOREST PHASE-II
4912 Franklin Ave. & 202 Lullwater Dr.
CITY OF WILMINGTON
NEW HANOVER COUNTY, NC

NORTH CAROLINA PROFESSIONAL SEAL 032555 ENGINEER CHARLES E. CAHILL JR.
PRELIMINARY DRAWING NOT FOR CONSTRUCTION

DEVELOPMENT NOTES:

1. ALL DEVELOPMENT SHALL BE IN ACCORDANCE WITH THE CITY OF WILMINGTON LAND DEVELOPMENT CODE.
2. PROJECT SHALL COMPLY WITH ALL FEDERAL, STATE & NEW HANOVER COUNTY REGULATIONS.
3. NO NEW SITE LIGHTING IS PROPOSED.

GENERAL TRAFFIC NOTES:

1. ALL TRAFFIC CONTROL SIGNS AND PAVEMENT MARKINGS OFF THE R/W TO BE MAINTAINED BY THE PROPERTY OWNER IN ACCORDANCE WITH MUTCD STANDARDS.
2. ALL PAVEMENT MARKINGS IN PUBLIC RIGHTS OF WAY AND FOR DRIVEWAYS ARE TO BE THERMOPLASTIC AND MEET CITY AND/OR NCDOT STANDARDS. [DETAIL SD 15:13 & SD 11-3 COFW TECH STDS]
3. ALL SIGNS AND PAVEMENT MARKINGS OFF RIGHT OF WAY ARE TO MEET/BE MAINTAINED TO MUTCD (MANUAL ON UNIFORM TRAFFIC CONTROL DEVICES) STANDARDS. [DETAIL SD 15 :13 & SD 11-3 COFW TECH STDS]
4. A UTILITY CUT PERMIT IS REQUIRED FOR EACH OPEN CUT OF A CITY STREET. NOTE THIS ON THE PLAN AND CONTACT 341 3869 FOR MORE DETAILS. IN CERTAIN CASES AN ENTIRE RESURFACING OF THE AREA BEING OPEN CUT MAY BE REQUIRED.
5. ANY BROKEN OR MISSING SIDEWALK PANELS, DRIVEWAY PANELS AND CURBING WILL BE REPLACED.
6. CONTACT 811 PRIOR TO CONTACTING CITY OF WILMINGTON, TRAFFIC ENGINEERING (341 7888) REGARDING THE UTILITIES IN ROW.
7. ALL PROPOSED VEGETATION WITHIN SIGHT TRIANGLES SHALL NOT INTERFERE WITH CLEAR VISUAL SIGHT LINES FROM 30" TO 10'.

UTILITY NOTES:

1. EXISTING WATER AND SANITARY SEWER SERVICES ARE CURRENTLY AVAILABLE TO THE SITE FROM CAPE FEAR PUBLIC UTILITY AUTHORITY PUBLIC MAINS.
2. ALL PROPOSED UTILITY SERVICES, SUCH AS ELECTRIC POWER, CATV, GAS & TELEPHONE SHALL BE INSTALLED UNDERGROUND
3. ALL WATER & SEWER UTILITIES TO BE INSTALLED PER CFPUA TECHNICAL SPECIFICATIONS & STANDARDS.
4. ANY BACKFLOW PREVENTION DEVICES REQUIRED BY THE CFPUA WILL NEED TO BE ON THE LIST OF APPROVED DEVICES BY USCFCCCHR OR ASSE.
5. IF CONTRACTOR DESIRES CFPUA WATER FOR CONSTRUCTION, HE SHALL APPLY IN ADVANCE FOR THIS SERVICE AND MUST PROVIDE A REDUCED PRESSURE ZONE (RPZ) BACKFLOW PREVENTION DEVICE ON THE DEVELOPER'S SIDE OF THE WATER METER BOX.
6. WHEN PVC WATER MAINS AND SERVICES ARE PROPOSED, THE PIPES ARE TO BE MARKED WITH NO. 10 INSULATED, SINGLE-STRAND COPPER WIRE INSTALLED & STRAPPED TO THE PIPES WITH DUCT TAPE. THIS IS TO BE ACCESSIBLE IN ALL VALVES AND METER BOXES TO AID IN FUTURE LOCATION OF FACILITIES.
7. THE CONTRACTOR IS RESPONSIBLE FOR THE LOCATION AND PROTECTION OF EXISTING UTILITIES DURING CONSTRUCTION. CALL NC811 AT 811 OR 1-800-632-4949. CONTRACTOR IS RESPONSIBLE FOR THE REPAIR AND REPLACEMENT OF ANY UTILITIES, CURB & GUTTER, PAVEMENT, ETC. THAT MAY BE BE DAMAGED DURING CONSTRUCTION. DAMAGED ITEMS SHALL BE REPAIRED TO AT LEAST THE QUALITY OR WORKMANSHIP FOUND IN THE ORIGINAL ITEM.
8. THE PROCESS FOR TELEPHONE CABLE PLACEMENT: * FINAL GRADE WILL NEED TO BE ESTABLISHED. * POWER WILL PLACE THEIR CABLE FIRST - APPROXIMATELY 3' DEEP. * TELEPHONE & CABLE TV WILL THEN PLACE THEIR CABLE AT APPROXIMATELY 2' DEEP.
9. SOLID WASTE DISPOSAL BY PRIVATE DUMPSTER SERVICE.
10. ANY EXISTING SEWER AND WATER SERVICES NOT BEING UTILIZED TO BE ABANDONED PER CFPUA STANDARDS & SPECIFICATIONS.

FIRE & SAFETY NOTES:

1. CONSTRUCTION TYPE: V-B (COMMERCIAL)
2. LANDSCAPING OR PARKING CANNOT BLOCK OR IMPEDE THE FDC OR FIRE HYDRANTS. A 3 FOOT CLEAR SPACE SHALL BE MAINTAINED AROUND THE CIRCUMFERENCE OF THE HYDRANT AND FDC.
3. CONTRACTOR SHALL MAINTAIN AN ALL-WEATHER ACCESS FOR EMERGENCY VEHICLES AT ALL TIMES DURING CONSTRUCTION.
4. HYDRANTS SHALL BE OF SUFFICIENT NUMBERS TO ACCOMMODATE BASE FIRE FLOW REQUIREMENTS OF STRUCTURE.
5. IN ADDITION TO THE STANDARD COMMENTS, ADDITIONAL FIRE PROTECTION AND ACCESSIBILITY REQUIREMENTS MAY BE REQUIRED DUE TO ANY SPECIAL CIRCUMSTANCES CONCERNING THE PROJECT.
6. A HYDRANT MUST BE WITHIN 150' OF THE FDC (MEASURED AS THE TRUCK DRIVES FOR PRACTICAL USE)
7. FDC MUST BE WITHIN 40' OF FIRE APPARATUS PLACEMENT.
8. PRIVATE UNDERGROUND FIRE LINES REQUIRE A SEPARATE UNDERGROUND FIRE LINE PERMIT FROM THE WILMINGTON FIRE AND LIFE SAFETY DIVISION 910-343-0696
9. ALL ISOLATION VALVES WITHIN THE "HOT BOX" AND BETWEEN THE "HOT BOX" AND THE RISER ROOM, MUST BE ELECTRICALLY SUPERVISED.
10. CONTRACTOR SHALL SUBMIT A RADIO SIGNAL STRENGTH STUDY FOR ALL COMMERCIAL BUILDINGS THAT DEMONSTRATES THAT EXISTING EMERGENCY RESPONDER RADIO SIGNAL LEVELS MEET THE REQUIREMENTS OF SECTION 510 OF THE 2018 NC FIRE CODE.
11. NEW HYDRANTS MUST BE BROUGHT INTO SERVICE PRIOR TO COMBUSTIBLE MATERIALS BEING DELIVERED TO THE SITE.

LEGEND

- PROPERTY LINE
- ADJOINERS
- RUNOFF DIRECTION
- EX. EOP
- PROP. WATER LINE
- PROP. SS LINE
- EXISTING FIRE HYDRANT
- BIKE RACK (5 SPACES)
- STREETYARD
- FOUNDATION PLANTINGS
- "DANDY SACK" INLET PROTECTION
- DROP INLET PROTECTION
- CURB INLET PROTECTION

30' 15' 0' 30' 60'
Scale: 1"=30'

CLIENT INFORMATION:

Ritz Partners 3, LLC.
Matt Scharf
1319-CC Military Cutoff Rd #172
Wilmington, NC 28405
Ph. 910-538-9901

DRAWN:	JAE	SHEET SIZE:	24x36
CHECKED:	CDC	DATE:	2/8/2021
APPROVED:	CDC	SCALE:	1" = 30'
PROJECT NUMBER:	2020-025		

DRAWING NUMBER:
C-1

CITY OF WILMINGTON
NORTH CAROLINA

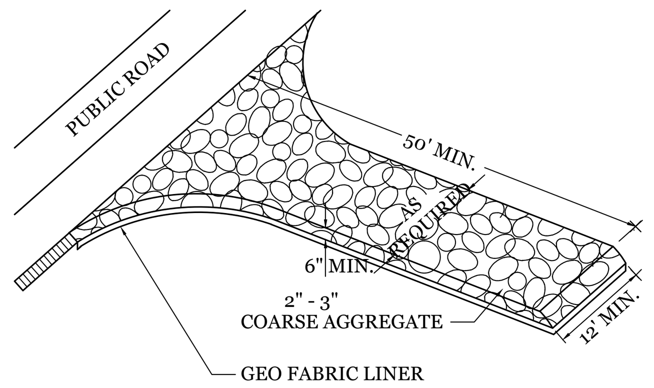

NOTE:
CONSTRUCTION ENTRANCE TO BE 12' OR ENTIRE WIDTH OF ENTRANCE. WHICHEVER IS GREATER.

TEMPORARY GRAVEL CONSTRUCTION ENTRANCE

NTS

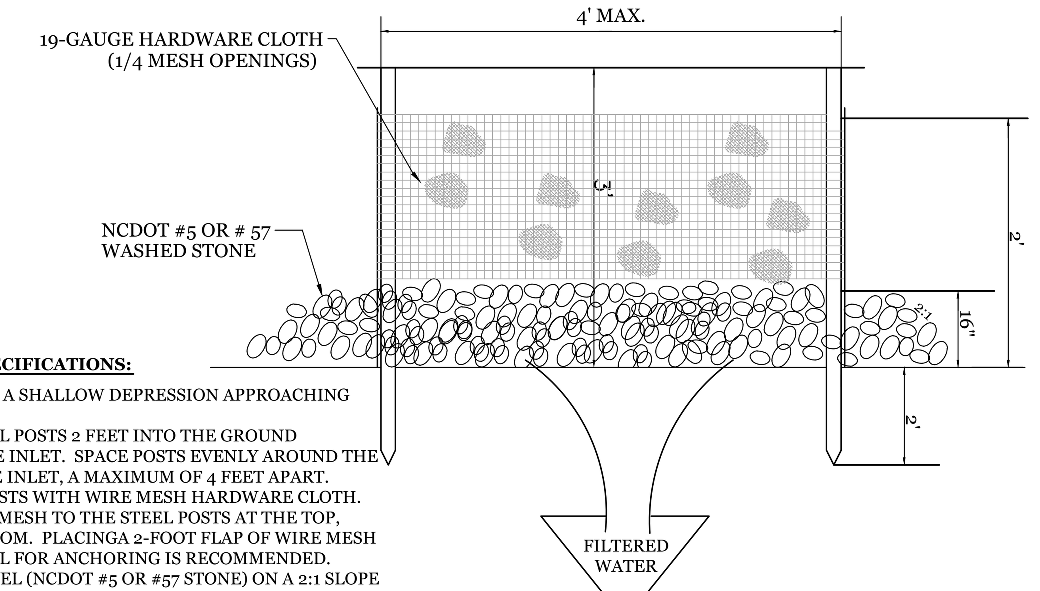

CONSTRUCTION SPECIFICATIONS:

1. UNIFORMLY GRADE A SHALLOW DEPRESSION APPROACHING THE INLET.
2. DRIVE 5-FOOT STEEL POSTS 2 FEET INTO THE GROUND SURROUNDING THE INLET. SPACE POSTS EVENLY AROUND THE PERIMETER OF THE INLET, A MAXIMUM OF 4 FEET APART.
3. SURROUND THE POSTS WITH WIRE MESH HARDWARE CLOTH. SECURE THE WIRE MESH TO THE STEEL POSTS AT THE TOP, MIDDLE, AND BOTTOM. PLACINGA 2-FOOT FLAP OF WIRE MESH UNDER THE GRAVEL FOR ANCHORING IS RECOMMENDED.
4. PLACE CLEAN GRAVEL (NCDOT #5 OR #57 STONE) ON A 2:1 SLOPE WITH A HEIGHT OF 16 INCHES AROUND THE WIRE, AND SMOOTH TO AN EVEN GRADE.
5. ONCE THE CONTRIBUTING DRAINAGE AREA HAS BEEN STABILIZED, REMOVE ACCUMULATED SEDIMENT, AND ESTABLISH FINAL GRADING ELEVATIONS.
6. COMPACT THE AREA PROPERLY AND STABILIZED IT WITH GROUNDCOVER.

MAINTENANCE:

INSPECT INLETS AT LEAST WEEKLY AND AFTER EACH SIGNIFICANT (½ INCH OR GREATER) RAINFALL EVENT. CLEAR THE MESH WIRE OF ANY DEBRIS OR OTHER OBJECTS TO PROVIDE ADEQUATE FLOW FOR SUBSEQUENT RAINS. TAKE CARE NOT TO DAMAGE OR UNDERCUT THE WIRE MESH DURING SEDIMENT REMOVAL. REPLACE STONE AS NEEDED.

HARDWARE CLOTH AND GRAVEL INLET PROTECTION

NTS

SITE WORK NOTES:

1. THE CONTRACTOR SHALL VISIT THE SITE AND BECOME FAMILIAR WITH EXISTING CONDITIONS BOTH ON AND ADJACENT TO THE SITE.
2. CLEARING: CONTRACTOR SHALL REMOVE ALL TREES AND VEGETATION WITHIN LIMITS OF CONSTRUCTION UNLESS OTHERWISE DESIGNATED TO REMAIN.
3. GRUBBING AND STRIPPING: CONTRACTOR SHALL RAKE AND REMOVE ROOTS, STUMPS, VEGETATION, DEBRIS, EXISTING STRUCTURES ABOVE AND BELOW GRADE, ORGANIC MATERIAL OR ANY OTHER UNSUITABLE MATERIAL WITHIN LIMITS OF CONSTRUCTION.
4. MUCKING: CONTRACTOR SHALL COORDINATE WITH OWNER AND THEIR GEOTECHNICAL REPRESENTATIVE TO COORDINATE REMOVAL OF ANY SOFT AREAS.
5. DISPOSAL: CLEARED, GRUBBED, STRIPPED OR OTHER WASTE MATERIAL SHALL BE REMOVED FROM SITE AND DISPOSED OF IN A PROPERLY PERMITTED FACILITY.
6. FILL AND COMPACTION SHOULD COMPLY WITH GEOTECHNICAL RECOMMENDATIONS.
7. THE CONTRACTOR SHALL NOTE THAT THE GRADING PLAN MAY NOT REPRESENT A BALANCED EARTHWORK CONDITION. THE CONTRACTOR SHALL BE RESPONSIBLE FOR CUT AND FILL QUANTITIES AND COMPLETE INSTALLATION TO SPECIFIED GRADES.
8. THE CONTRACTOR SHALL FURNISH SUITABLE BORROW MATERIAL FROM AN OFF-SITE PROPERLY PERMITTED FACILITY AS REQUIRED.
9. INFORMATION CONCERNING UNDERGROUND UTILITIES WAS OBTAINED FROM AVAILABLE RECORDS. IT SHALL BE THE RESPONSIBILITY OF THE CONTRACTOR TO DETERMINE THE EXACT ELEVATIONS AND LOCATIONS OF ALL EXISTING UTILITIES AT ALL CROSSINGS PRIOR TO COMMENCING TRENCH EXCAVATION. IF ACTUAL CLEARANCES ARE LESS THAN INDICATED ON PLAN, THE CONTRACTOR SHALL CONTACT THE DESIGN ENGINEER BEFORE PROCEEDING WITH CONSTRUCTION. ANY CONDITION DISCOVERED OR EXISTING THAT WOULD NECESSITATE A MODIFICATION OF THESE PLANS SHALL BE BROUGHT TO THE ATTENTION OF THE DESIGN ENGINEER BEFORE PROCEEDING WITH CONSTRUCTION.
10. NO CONSTRUCTION IS TO BEGIN BEFORE LOCATION OF EXISTING UTILITIES HAS BEEN DETERMINED. CALL "NC ONE-CALL" AT LEAST 48 HOURS BEFORE COMMENCING CONSTRUCTION.
11. THE CONTRACTOR IS RESPONSIBLE FOR THE LOCATION AND PROTECTION OF ALL EXISTING UTILITIES DURING CONSTRUCTION. BEFORE COMMENCING ANY EXCAVATIONS IN OR ALONG ROADWAYS OR RIGHT-OF-WAYS, PUBLIC AREAS OR IN PRIVATE EASEMENTS, THE CONTRACTOR SHALL NOTIFY ALL APPROPRIATE PERSONNEL OF THEIR INTENT TO EXCAVATE, IN WRITING, NOT LESS THAN 10 DAYS PRIOR TO EXCAVATING.
12. THE CONTRACTOR SHALL BE RESPONSIBLE TO COORDINATE DISCONNECTION/ RECONNECTION AND/OR THE RELOCATION OF ALL EXISTING UTILITIES WITH APPROPRIATE PERSONNEL.
13. CONTRACTOR SHALL ADJUST ALL MANHOLES, VALVE & CURB BOXES TO FINAL GRADE UPON COMPLETION OF ALL CONSTRUCTION. ANY BOXES DAMAGED OR OTHERWISE DISTURBED BY THE CONTRACTOR SHALL BE REPAIRED AT THE EXPENSE OF THE CONTRACTOR.
14. THE CONTRACTOR SHALL FIELD VERIFY ALL DIMENSIONS AT THE SITE. FURTHERMORE THE CONTRACTOR SHALL REPORT ALL DISCREPANCIES OR QUESTIONS TO THE ENGINEER PRIOR TO INSTALLATION.
15. THE CONTRACTOR SHALL PROVIDE ANY AND ALL LAYOUT REQUIRED TO CONSTRUCT HIS WORK UNLESS OTHERWISE DIRECTED BY OWNER.
16. ALL SERVICE CONNECTIONS SHALL BE INSTALLED TO MEET ALL LOCAL, STATE, AND CFPUA CODES. METERS, TAPS, MATERIALS, WORKMANSHIP AND ALL FEES SHALL BE THE RESPONSIBILITY OF THE CONTRACTOR AND SHALL COMPLY WITH ALL REQUIREMENTS.
17. ALL BACKFILL FROM UTILITY INSTALLATION MUST BE COMPACTED OR AMENDED TO PROVIDE TRAFFIC BEARING CAPACITY. GEOTECHNICAL ENGINEER TO BE CONSULTED AT CONTRACTORS COST AS NECESSARY.
18. ALL AREAS SHALL BE GRADED FOR POSITIVE DRAINAGE. CONTRACTOR SHALL REPORT ANY DISCREPANCIES TO THE ENGINEER PRIOR TO INSTALLATION. ALL AREAS SHALL BE SLOPED TO DRAIN AWAY FROM BUILDINGS AT ALL TIMES.
19. CONCRETE FOR WALKS, CURBS AND DRIVES SHALL HAVE A MINIMUM COMPRESSIVE STRENGTH OF 3000 PSI @ 28 DAYS - AIR ENTRAINED.
20. FIELD TESTING SHALL BE DONE BY AN INDEPENDENT TESTING LABORATORY PAID FOR BY THE OWNER. FURTHER TESTING REQUIRED DUE TO A FAILED TEST WILL BE PAID FOR BY THE CONTRACTOR.
21. ALL SIDEWALKS SHALL BE FREE OF CRACKS, BREAKS, OR ANY OTHER DEFECT PRIOR TO RECEIVING A CERTIFICATE OF OCCUPANCY.

VICINITY MAP (NOT TO SCALE):

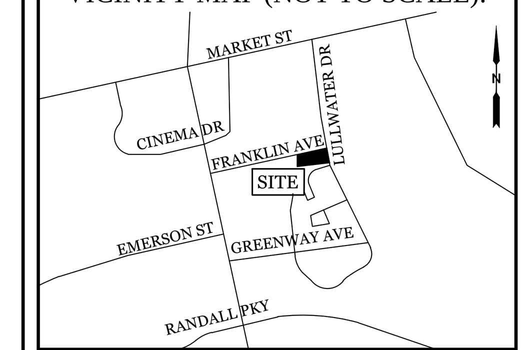

REVISIONS

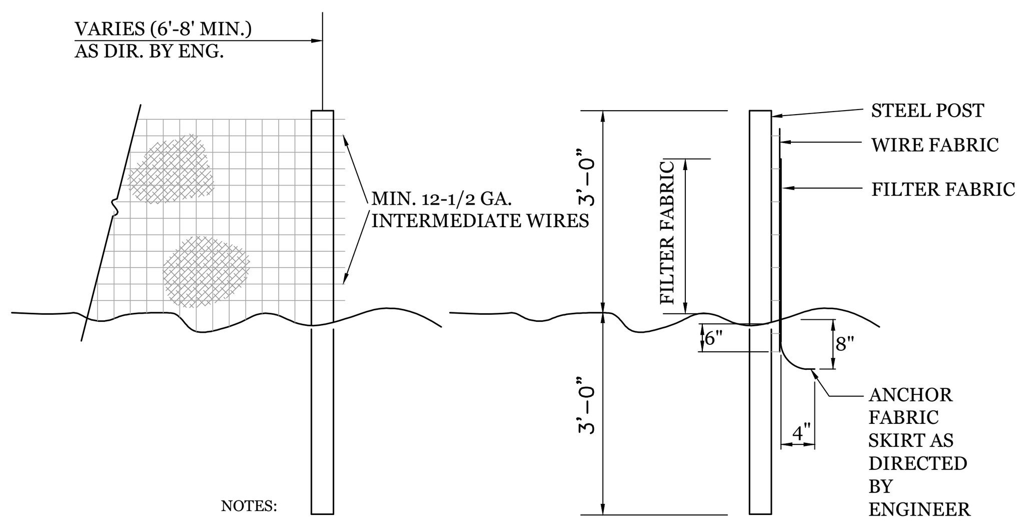

NOTES:

1. FENCE FABRIC SHALL BE A MIN. OF 32" IN WIDTH AND SHALL HAVE A MIN. OF SIX LINE WIRES WITH 12" STAY SPACING.
2. FABRIC SHALL BE FOR EROSION CONTROL AND MIN. OF 36" IN WIDTH. FABRIC SHALL BE FASTENED ADEQUATELY TO THE WIRE FABRIC AS DIRECTED BY THE ENGINEER.
3. STEEL POST SHALL BE 5'-0" IN HEIGHT AND BE OF THE SELF-FASTENER STEEL ANGLE TYPE.

TEMPORARY SILT FENCE

NTS

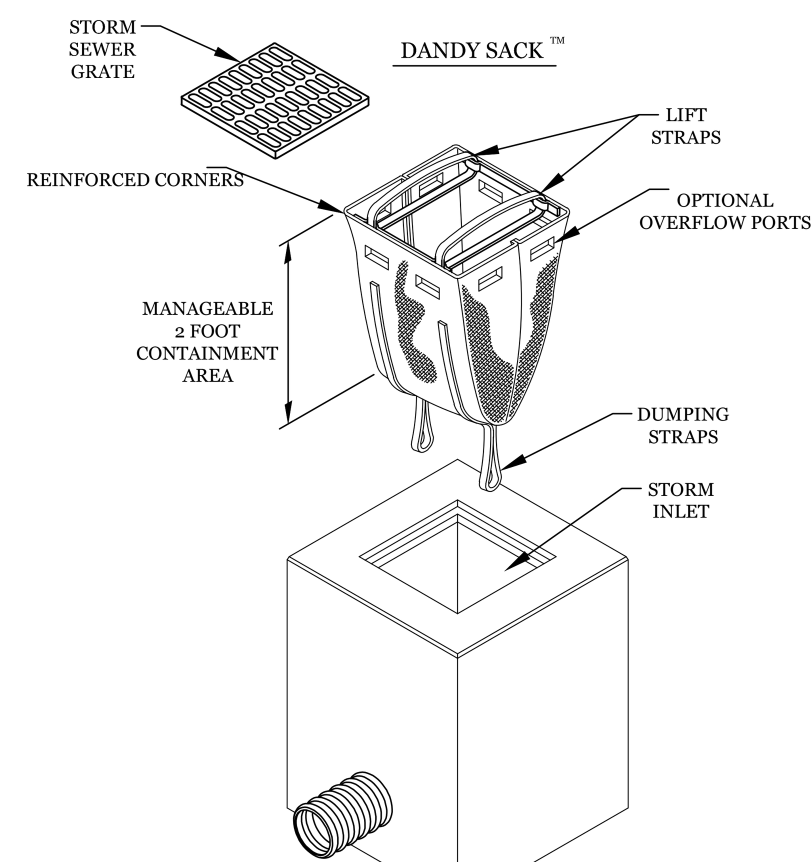

DANDY SACK DETAIL

NTS

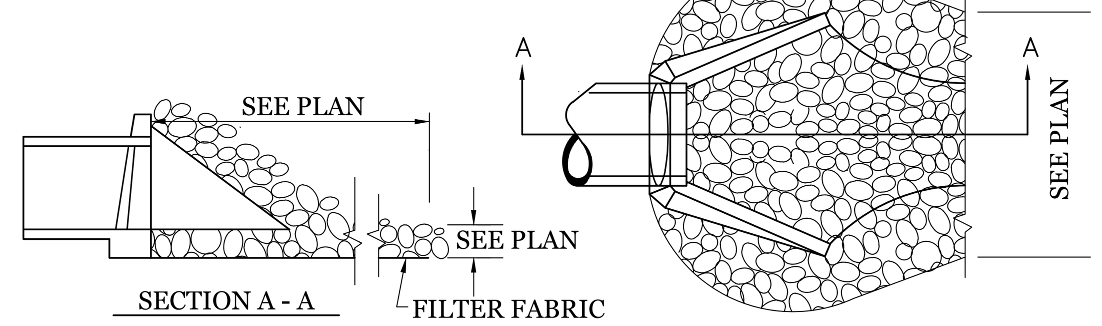

NOTES:
1. CLASS "B" RIP RAP TO BE USED FOR ALL ENERGY DISSIPATOR AREAS.

ENERGY DISSIPATOR

NTS

INTRACOASTAL ENGINEERING, PLLC

5725 Oleander Dr. Unit E-7
Wilmington, North Carolina 28403
Phone: 910.859.8983
Email: Charlie@intracoastalengineering.com
License Number: P-0662

DETAILS

FOR

FRANKLIN FOREST PHASE-II

4912 Franklin Ave. & 202 Lullwater Dr.
CITY OF WILMINGTON
NEW HANOVER COUNTY, NC

NORTH CAROLINA PROFESSIONAL SEAL 032555 ENGINEER CHARLES D. CAZIER

PRELIMINARY DRAWING DO NOT USE FOR CONSTRUCTION

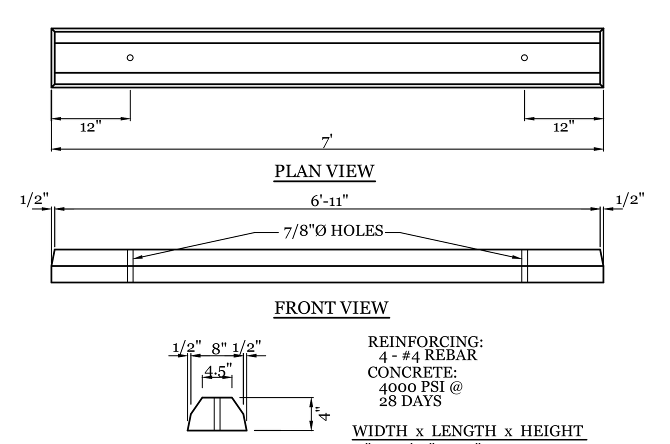

NOTE:
1. CONTRACTOR SHALL INSTALL PER CITY OF WILMINGTON TECHNICAL STANDARD PER SD 15-13
2. CONTRACTOR SHALL INSTALL WHEEL STOP 2.5' FROM SIDEWALK.

WHEEL STOP DETAIL

NTS

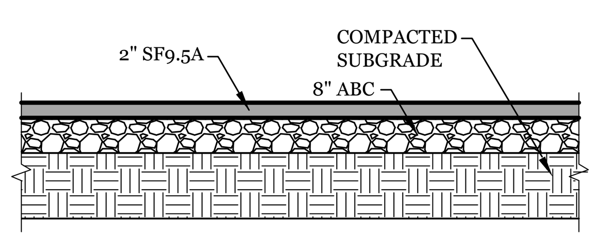

PAVEMENT SECTION

NTS

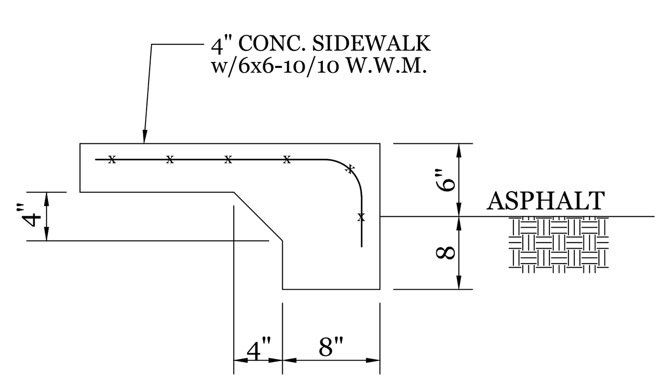

TURNDOWN SIDEWALK

NTS

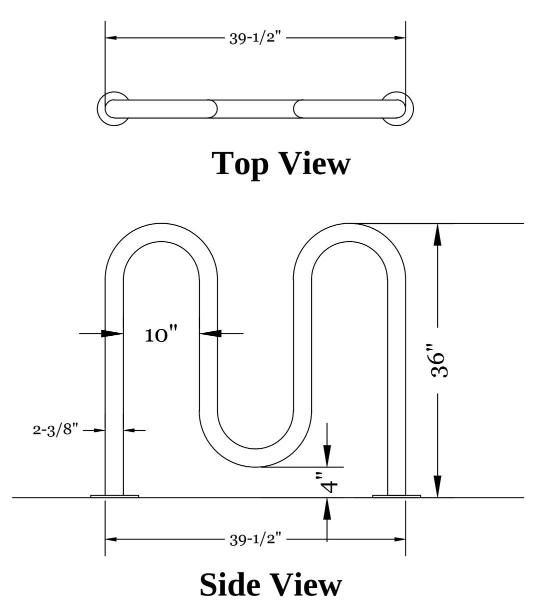

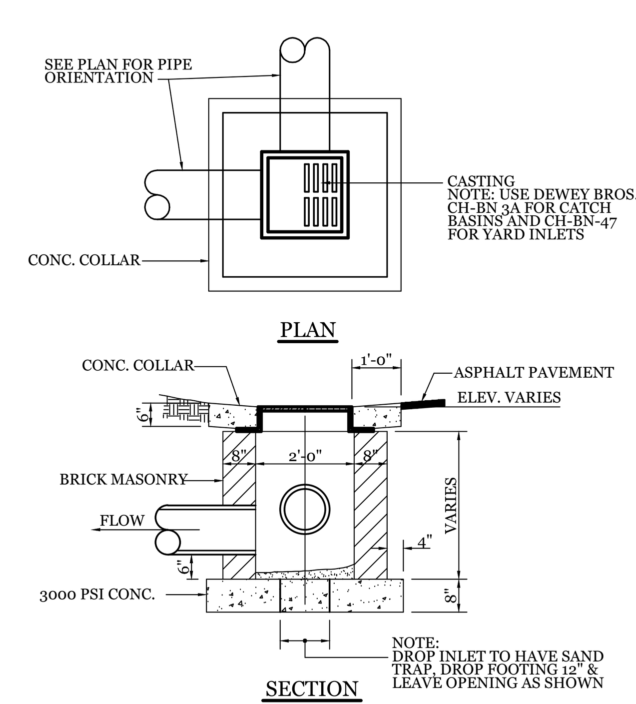

DROP INLET DETAIL

NTS

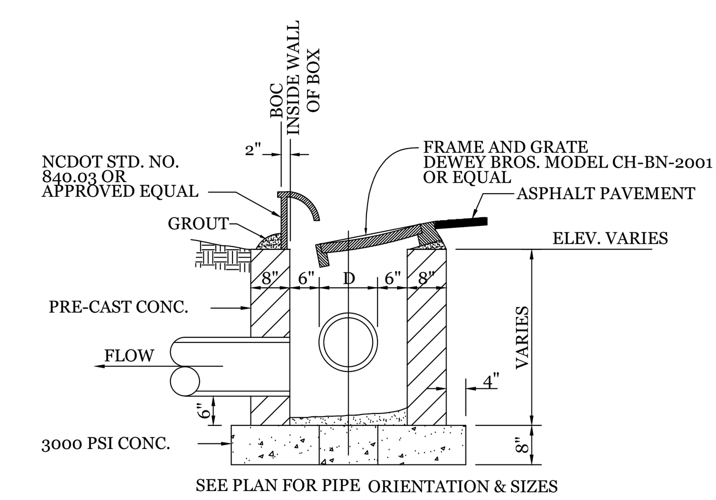

CURB INLET DETAIL

NTS

CLIENT INFORMATION:

Ritz Partners 3, LLC.
Matt Scharf
1319-CC Military Cutoff Rd #172
Wilmington, NC 28405
Ph. 910-538-9901

DRAWN: JAE		SHEET SIZE:	24x36
CHECKED: CDC		DATE:	2/8/2021
APPROVED: CDC		SCALE:	NTS
PROJECT NUMBER:	2020-025		

DRAWING NUMBER: C-2

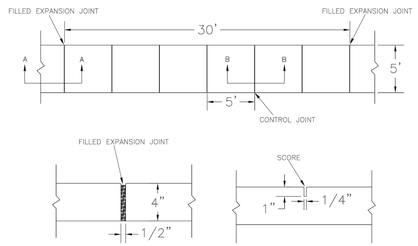

NOTES:

1. JOINT MATERIAL TO COMPLY WITH CURRENT NCDOT STANDARDS.
2. SANITARY SEWER CLEAN-OUTS, WATER METERS, MANHOLES, AND VALVE LIDS TO BE LOCATED OUTSIDE SIDEWALK WHERE FEASIBLE.
3. MINIMUM SIDEWALK WIDTH TO BE 6' MINIMUM IF PLACED AT BACK OF CURB.
4. CONCRETE FOR ALL SIDEWALKS (EXCEPT ANY PORTION CONTAIN WITHIN A DRIVEWAY APRON) SHALL BE CLASS "A" – 3,000 PSI.
5. MINIMUM REPLACEMENT FOR REPAIRS IS A 5' X 5' PANEL.
6. 4" STONE BASE MAY BE REQUIRED FOR POOR SOIL CONDITIONS
7. MINIMUM DEPTH FOR TUNNELING BELOW SIDEWALK IS 12"
8. MAX ADJACENT GROUND SLOPE WITHOUT RAILING IS 2:1
9. MIN GRADE FOR PROPER DRAINAGE IS 1% IN AT LEAST 1 DIRECTION. MAX CROSS SLOPE IS 2%. MAX LONGITUDINAL SLOPE IS 8.3%, 10% IF LIMITED BY EXISTING CONDITIONS, OR NO GREATER THAN THE SLOPE OF THE EXISTING ADJACENT ROAD.

DATE: OCTOBER, 2010	STANDARD DETAIL	CITY OF WILMINGTON NORTH CAROLINA
DRAWN: PB/JSR	SIDEWALK	CITY OF WILMINGTON ENGINEERING PO BOX 1810 WILMINGTON N.C. 28402 (910) 341–7807
CHECKED: DEC		
SCALE NOT TO SCALE		SD 3-10

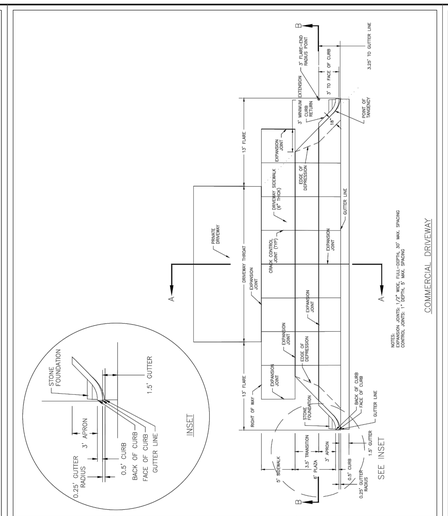

DATE: JUNE 1, 2015	STANDARD DETAIL	CITY OF WILMINGTON NORTH CAROLINA
DRAWN BY JSR	COMMERCIAL DRIVEWAY PLAN	CITY OF WILMINGTON ENGINEERING PO BOX 1810 WILMINGTON N.C. 28402 (910) 341–7807
CHECKED BY D.E.C., P.E.	1 of 2	
SCALE NOT TO SCALE		SD 3-03.3

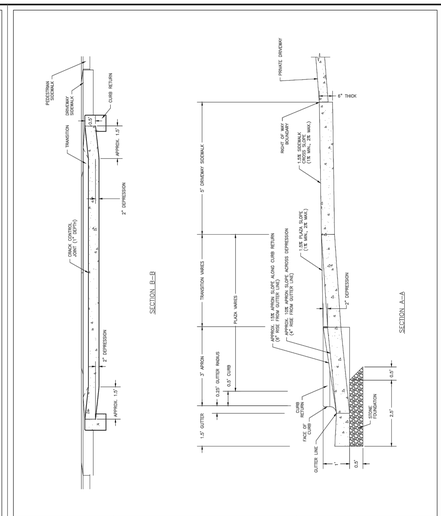

DATE: JUNE 1, 2015	STANDARD DETAIL	CITY OF WILMINGTON NORTH CAROLINA
DRAWN BY JSR	COMMERCIAL DRIVEWAY SECTIONS	CITY OF WILMINGTON ENGINEERING PO BOX 1810 WILMINGTON N.C. 28402 (910) 341–7807
CHECKED BY D.E.C., P.E.	2 of 2	
SCALE NOT TO SCALE		SD 3-03.4

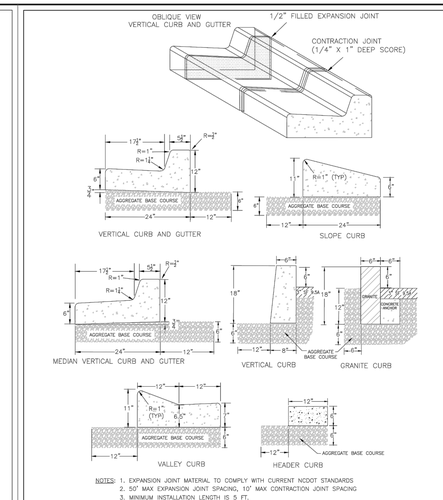

NOTES:
1. EXPANSION JOINT MATERIAL TO COMPLY WITH CURRENT NCDOT STANDARDS
2. 50' MAX EXPANSION JOINT SPACING, 10' MAX CONTRACTION JOINT SPACING
3. MINIMUM INSTALLATION LENGTH IS 5 FT.
4. CONCRETE TO BE 3000 PSI MIN
5. VERTICAL CURB AND GUTTER BASE CAN BE SLOPED 3/4" OR USE A FLAT BASE

DATE: AUGUST, 2011	STANDARD DETAIL	CITY OF WILMINGTON NORTH CAROLINA
DRAWN: PB/JSR	CURBING	CITY OF WILMINGTON ENGINEERING PO BOX 1810 WILMINGTON N.C. 28402 (910) 341–7807
CHECKED: DEC		
SCALE NOT TO SCALE		SD 3-11

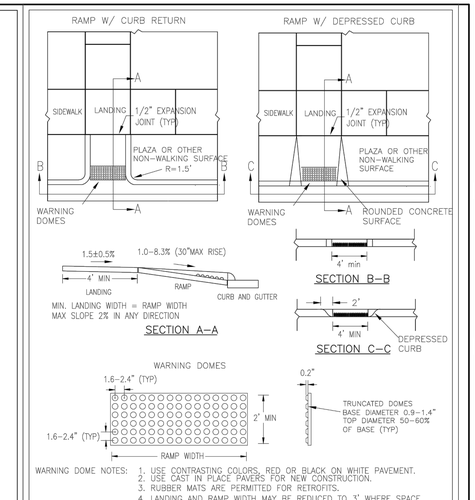

WARNING DOME NOTES:
1. USE CONTRASTING COLORS, RED OR BLACK ON WHITE PAVEMENT.
2. USE CAST IN PLACE PAVERS FOR NEW CONSTRUCTION.
3. RUBBER MATS ARE PERMITTED FOR RETROFITS.
4. LANDING AND RAMP WIDTH MAY BE REDUCED TO 3' WHERE SPACE IS LIMITED AND DESIGN IS APPROVED BY THE CITY ENGINEER.

DATE: DECEMBER, 2010	STANDARD DETAIL	CITY OF WILMINGTON NORTH CAROLINA
DRAWN: PB/JSR	PERPENDICULAR CURB RAMP ADJACENT TO PLAZA	CITY OF WILMINGTON ENGINEERING PO BOX 1810 WILMINGTON N.C. 28402 (910) 341–7807
CHECKED: DEC		
SCALE NOT TO SCALE		SD3-08

VICINITY MAP (NOT TO SCALE):

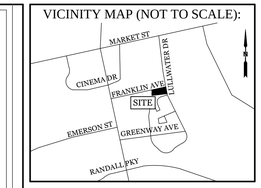

REVISIONS

INTRACOASTAL ENGINEERING, PLLC
5725 Oleander Dr. Unit E-7
Wilmington, North Carolina 28403
Phone: 910.859.8983
Email: Charlie@intracoastalengineering.com
License Number: P-0662

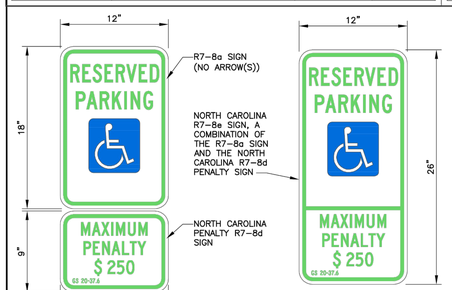

R7-8a and R7-8d Signage Figure A1.1

EITHER THE COMBINATION OF THE R7–8a AND R7–8d SIGNS OR THE R7–8e SIGN CAN BE USED.

R7-8e Signage Figure A1.2

WHERE VAN ACCESSIBLE PARKING IS PROVIDED, THE VAN ACCESSIBLE (R7–8P) SIGN SHALL BE MOUNTED BELOW THE OTHER ACCESSIBLE PARKING SIGNS. (2009 EDITION MUTCD SECTION 2B.47)

R7-8P Signage Figure A1.3

FOR DESIGN OF ACCESSIBLE SIGNS, SEE THE FOLLOWING:

- 2009 MUTCD OR LATEST EDITION.
- 2004 EDITION OF THE STANDARD HIGHWAY SIGNS AND THE 2012 SUPPLEMENT OR LATEST EDITION.
- NORTH CAROLINA 2009 SUPPLEMENT TO THE MANUAL OF UNIFORM TRAFFIC CONTROL DEVICES OR LATEST EDITION
- NCDOT DRAWING H–1_S FOR SIGNS SP00075, SP00076, AND SP00077.

DATE: NOVEMBER 8, 2016	ACCESSIBLE PARKING SIGNS AND INSTALLATION DETAILS SHEET A1 OF 5	CITY OF WILMINGTON TRAFFIC ENGINEERING P.O. Box 1810 • Wilmington, NC 28402 • (910) 341-7800
DRAWN BY: DALE THOMPSON		
CHECKED BY: RANDALL GLAZIER		
SCALE: NOT TO SCALE		

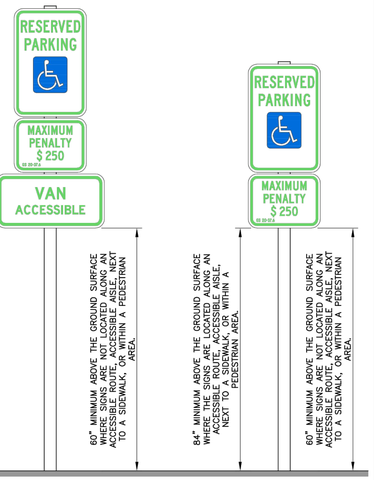

Signage Height Figure A2.1

DATE: NOVEMBER 8, 2016	ACCESSIBLE PARKING SIGNS AND INSTALLATION DETAILS SHEET A2 OF 5	CITY OF WILMINGTON TRAFFIC ENGINEERING P.O. Box 1810 • Wilmington, NC 28402 • (910) 341-7800
DRAWN BY: DALE THOMPSON		
CHECKED BY: RANDALL GLAZIER		
SCALE: NOT TO SCALE		

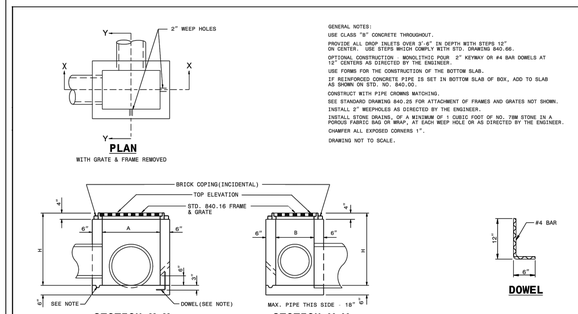

GENERAL NOTES:
USE CLASS "B" CONCRETE THROUGHOUT.
PROVIDE ALL DROP INLETS OVER 3'-6" IN DEPTH WITH STEPS 12" ON CENTER. USE STEPS WHICH COMPLY WITH STD. DRAWING 840.66.
OPTIONAL CONSTRUCTION : MONOLITHIC POUR 2" KEYWAY ON #4 BAR DOWELS AT 12" CENTERS AS DIRECTED BY THE ENGINEER.
USE FORMS FOR THE CONSTRUCTION OF THE BOTTOM SLAB.
IF REINFORCED CONCRETE PIPE IS SET IN BOTTOM SLAB OF BOX, ADD TO SLAB AS SHOWN ON STD. NO. 840.00.
CONSTRUCT WITH PIPE CROWNS MATCHING.
SEE STANDARD DRAWING 840.25 FOR ATTACHMENT OF FRAMES AND GRATES NOT SHOWN.
INSTALL 2" WEEPHOLES AS DIRECTED BY THE ENGINEER.
INSTALL STONE DRAINS, OF A MINIMUM OF 1 CUBIC FOOT OF NO. 78M STONE IN A POROUS FABRIC BAG OR WRAP, AT EACH WEEP HOLE OR AS DIRECTED BY THE ENGINEER.
CHAMFER ALL EXPOSED CORNERS 1".
DRAWING NOT TO SCALE.

DIMENSIONS AND QUANTITIES FOR DROP INLET(BASED ON MIN. HEIGHT, H)

DIMENSIONS OF BOX & PIPE				CUBIC YARDS CONC. IN BOX				DEDUCTIONS FOR ONE PIPE	
PIPE	SPAN	WIDTH	MIN. HEIGHT	BOTTOM SLAB	WALL PER FT. HT.	WALL PER FT. HT. (INCL. 1/2 TOP SLAB)	C.M.	R.C.
D	A	B	H					
12"	3'-0"	2'-0"	2'-0"	0.222	0.222	0.592	0.015	0.026
15"	/	/	2'-3"	/	/	0.648	0.023	0.036
18"	/	/	2'-6"	/	/	0.703	0.033	0.049
24"	/	/	3'-0"	/	/	0.814	0.059	0.085
30"	3'-0"	2'-0"	3'-6"	0.222	0.222	0.925	0.092	0.127

STATE OF NORTH CAROLINA DEPT. OF TRANSPORTATION DIVISION OF HIGHWAYS RALEIGH, N.C.	1-18	ROADWAY STANDARD DRAWING FOR **CONCRETE DROP INLET** 12" THRU 30" PIPE
SHEET 1 OF 1		840.14

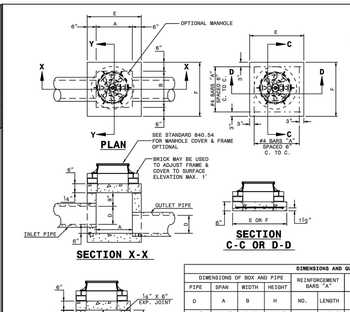

GENERAL NOTES:
CHAMFER ALL EXPOSED CORNERS 1".
USE CLASS "B" CONCRETE THROUGHOUT.
OPTIONAL CONSTRUCTION : MONOLITHIC POUR, 2" KEYWAY, OR #4 BAR DOWELS AT 12" CENTERS AS DIRECTED BY THE ENGINEER.
USE FORMS TO CONSTRUCT THE BOTTOM SLAB.
IF REINFORCED CONCRETE PIPE IS SET IN BASE SLAB OF BOX, ADD TO BASE AS SHOWN ON STANDARD NO. 840.00.
PROVIDE ALL JUNCTION BOXES OVER 3'-6" IN DEPTH WITH STEPS 12" ON CENTERS IN ACCORDANCE WITH STD. NO. 840.66.
ADJUST THE STEEL, CONCRETE AND BRICK MASONRY QUANTITIES TO INCLUDE THE ADDITION OF THE MANHOLE (I.E. DIAGONAL BARS SHORTENED AROUND OPENING IN TOP SLAB, ADDITIONAL VARIABLE HEIGHT BRICK MASONRY, OPENING IN TOP SLAB.)
MAX. DEPTH OF THIS STRUCTURE FROM TOP OF BOTTOM SLAB TO TOP ELEVATION IS 12 FEET.

DIMENSIONS AND QUANTITIES FOR CONCRETE JUNCTION BOXES

DIMENSIONS OF BOX AND PIPE				REINFORCEMENT BARS "A"		TOP SLAB DIMENSIONS		CUBIC YARDS IN BOX			TOTAL QUANTITIES BOX AND SLABS		DEDUCTIONS FOR ONE PIPE CU.YDS.	
PIPE	SPAN	WIDTH	HEIGHT					TOP SLAB	BOTTOM SLAB	WALL PT. OF HT.	LBS. REINF	CU. YDS. MIN. "H"	C.S.	R.C.
D	A	B	H	NO.	LENGTH	E	F							
12"	2'-0"	2'-0"	2'-3"	12	2'-9"	3'-0"	3'-0"	0.167	0.167	0.185	22	0.750	0.015	0.024
15"	2'-3"	2'-3"	2'-6"	12	3'-0"	3'-3"	3'-3"	0.196	0.196	0.204	24	0.902	0.023	0.036
18"	2'-6"	2'-6"	2'-9"	14	3'-3"	3'-6"	3'-6"	0.227	0.227	0.222	30	1.065	0.033	0.049
24"	3'-0"	3'-0"	3'-3"	16	3'-9"	4'-0"	4'-0"	0.296	0.296	0.269	40	1.434	0.059	0.085
30"	3'-6"	3'-6"	3'-9"	18	4'-3"	4'-6"	4'-6"	0.375	0.375	0.296	51	1.860	0.092	0.127
36"	4'-0"	4'-0"	4'-3"	20	4'-9"	5'-0"	5'-0"	0.463	0.463	0.333	64	2.341	0.132	0.178
42"	4'-6"	4'-6"	4'-9"	22	5'-3"	5'-6"	5'-6"	0.560	0.560	0.370	77	2.878	0.180	0.243
48"	5'-4"	5'-4"	5'-3"	26	6'-3"	6'-4"	6'-4"	0.743	0.743	0.407	111	3.623	0.235	0.317
54"	5'-10"	5'-10"	5'-9"	28	6'-7"	6'-10"	6'-10"	0.865	0.865	0.444	126	4.283	0.297	0.401
60"	6'-6"	6'-6"	6'-3"	30	7'-3"	7'-6"	7'-6"	1.042	1.042	0.481	145	5.090	0.367	0.495
66"	7'-1"	7'-1"	6'-9"	32	7'-10"	8'-1"	8'-1"	1.210	1.210	0.518	169	5.917	0.444	0.589

STATE OF NORTH CAROLINA DEPT. OF TRANSPORTATION DIVISION OF HIGHWAYS RALEIGH, N.C.	1-18	ROADWAY STANDARD DRAWING FOR **CONCRETE JUNCTION BOX** (WITH STANDARD MANHOLE) 12" THRU 66" PIPE
SHEET 1 OF 1		840.31

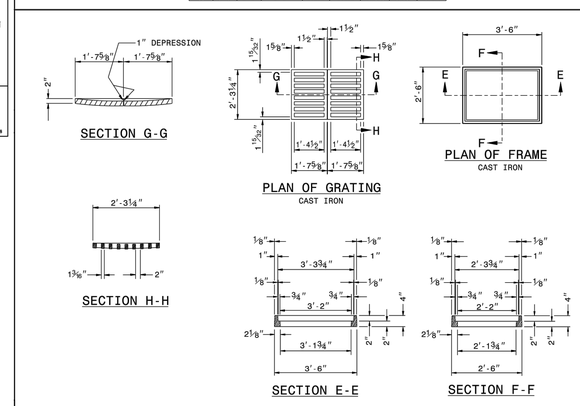

STATE OF NORTH CAROLINA DEPT. OF TRANSPORTATION DIVISION OF HIGHWAYS RALEIGH, N.C.	1-18	ROADWAY STANDARD DRAWING FOR **DROP INLET FRAME AND GRATES** FOR USE WITH STD. DWG.S 840.14 AND 840.15
SHEET 1 OF 1		840.16

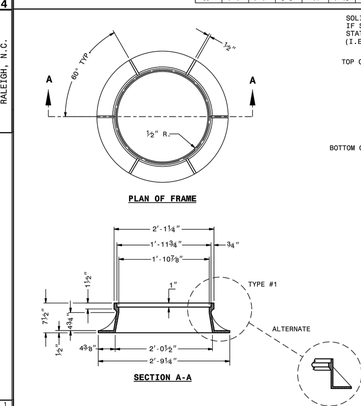

STATE OF NORTH CAROLINA DEPT. OF TRANSPORTATION DIVISION OF HIGHWAYS RALEIGH, N.C.	1-18	ROADWAY STANDARD DRAWING FOR **MANHOLE FRAME AND COVER**
SHEET 1 OF 1		840.54

DETAILS
FOR
FRANKLIN FOREST PHASE-II
4912 Franklin Ave. & 202 Lullwater Dr.
CITY OF WILMINGTON
NEW HANOVER COUNTY, NC

NORTH CAROLINA PROFESSIONAL SEAL 032555 ENGINEER CHARLIE D. CATER
PRELIMINARY NOT FOR CONSTRUCTION
DRAWING NOT FOR USE

CLIENT INFORMATION:
Ritz Partners 3, LLC.
Matt Scharf
1319-C Military Cutoff Rd #172
Wilmington, NC 28405
Ph. 910-538-9901

DRAWN:	JAE	SHEET SIZE:	24X36
CHECKED:	CDC	DATE:	2/8/2021
APPROVED:	CDC	SCALE:	NTS
PROJECT NUMBER:		2020-025	

DRAWING NUMBER:
C-3
4 OF 5

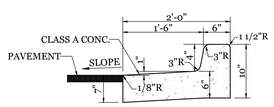

DRAINAGE AWAY FROM CURB

4" HIGH CURB SECTION

NTS

CITY OF WILMINGTON NORTH CAROLINA

P

PPR V D DR PL

D P

d

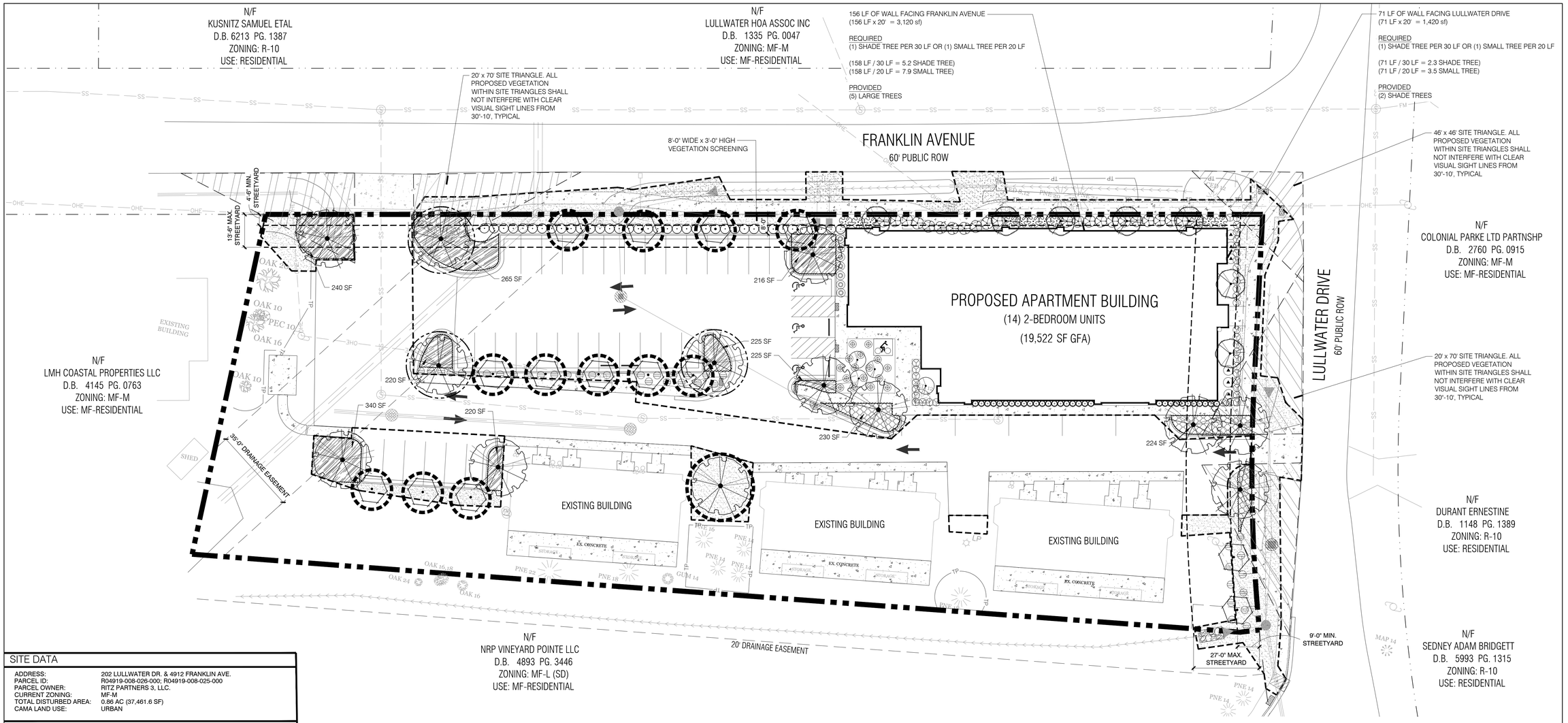

SITE DATA

ADDRESS:	202 LULLWATER DR. & 4912 FRANKLIN AVE.
PARCEL ID:	R04919-008-026-000; R04919-008-025-000
PARCEL OWNER:	RITZ PARTNERS 3, LLC.
CURRENT ZONING:	MF-M
TOTAL DISTURBED AREA:	0.86 AC (37,461.6 SF)
CAMA LAND USE:	URBAN

LANDSCAPE REQUIREMENTS

	REQUIRED	PROVIDED
PARKING LOT CANOPY COVERAGE		
(9,670 SF X 20%)	1,934 SF	3 LARGE TREES, (707 x 3 = 2,121 SF)
STREET YARD PLANTING		
PRIMARY STREETYARD: MULTIPLIER 18 (9' MIN. & 27' MAX. WIDTH)		
LULLWATER DR.	170.85 LF - 15 LF (DRIVEWAYS) = 155.85 x 18 2,805 SF REQUIRED	2,825 SF
TREES REQUIRED	5 (1/600 SF)	5 PROPOSED CANOPY TREES
SHRUBS REQUIRED	28 (6/600 SF)	48 PROPOSED SHRUBS
SECONDARY STREETYARD: MULTIPLIER 9 (4.5' MIN. & 13.5' MAX. WIDTH)		
FRANKILIN AVE.	409.44 LF - 24.6 LF (DRIVEWAYS) = 384.84 x 9 3,464 SF REQUIRED	3,483 SF
TREES REQUIRED	6 (1/600 SF)	6 PROPOSED CANOPY TREES
SHRUBS REQUIRED	35 (6/600 SF)	71 PROPOSED SHRUBS
FOUNDATION PLANTING		
12% FACADE AREA		
BUILDING #1		
WEST	168 SF (70 LF x 20' HT x .12)	200 SF
SOUTH	365 SF (152 LF x 20' HT x .12)	370 SF

RETAINED TREES COUNTED TOWARD OVERALL TREE REQUIREMENTS

QUANTITY	SIZE	COMMON NAME
1	12"	CEDAR
		TOTAL CREDIT = 3

TREE MITIGATION REQUIREMENTS

REMOVED SIGNIFICANT TREES

QUANTITY	SIZE	COMMON NAME	% MITIGATION
1	24"	OAK	100

24" x (2) = 48" / 3 = 16 TREES
TOTAL: 16 TREES REQUIRED FOR MITIGATION

***REMOVED REGULATED TREES ARE ALL ESSENTIAL SITE IMPROVEMENTS**

TOTAL TREES REQUIRED FOR MITIGATION = 16 TREES
TOTAL RETAINED TREE CREDITS = 3 CREDITS
TREES PLANTED TO MEET MITIGATION = 13

TREE REQUIREMENTS PER DISTURBED ACRE
15 TREES PER DISTURBED ACRE MUST BE RETAINED OR PLANTED ON SITE.

REQUIRED:	0.86 ACRES DISTURBED x 15 TREES = 13 TREES REQUIRED
PROVIDED:	33 TREES PLANTED - REFER TO PLANTING LEGEND
TOTAL:	**33 TREES PROVIDED**

For each open utility cut of City streets, a $325 permit shall be required from the City prior to occupancy and/or project acceptance.

Approved Construction Plan

	Name	Date
Planning		
Public Utilities		
Traffic		
Fire		

CITY OF WILMINGTON NORTH CAROLINA
Public Services • Engineering Division
APPROVED STORMWATER MANAGEMENT PLAN
Date:_____ Permit #_____
Signed: _____

GENERAL PLANTING NOTES

1. THIS WORK INCLUDES, BUT IS NOT LIMITED TO THE FURNISHING OF ALL LABOR, MATERIALS, EQUIPMENT, FINAL GRADING, SEEDING, SOIL AMENDMENTS, ETC., AS MAY BE REQUIRED FOR A COMPLETE INSTALLATION.
2. QUANTITIES SHOWN IN PLANT LISTS ARE FOR CONVENIENCE ONLY. PLANS SHALL GOVERN.
3. THE LANDSCAPE CONTRACTOR SHALL NOTIFY THE LANDSCAPE ARCHITECT OF ANY DISCREPANCIES IN PLANT LOCATIONS OR INSUFFICIENT PLANT QUANTITIES DUE TO DIFFERENCES IN PLAN AND ACTUAL FIELD CONDITIONS.
4. ALL TREE AND SHRUB MATERIAL SPECIFIED MUST MEET STANDARD INDUSTRY SPECIFICATIONS FOR THE CONTAINER SIZE INDICATED. DOWNSIZING OR SUBSTITUTION OF PLANT MATERIAL WITHOUT PRIOR APPROVAL OF LANDSCAPE ARCHITECT WILL NOT BE ALLOWED.
5. ALL LANDSCAPE AREAS SHALL BE GRADED TO A SMOOTH EVEN SURFACE PRIOR TO ANY PLANT INSTALLATION. ALL PLANT MATERIALS SHALL BE INSTALLED USING GOOD HORTICULTURAL PRACTICES IN ACCORDANCE WITH THE PLANS AND DETAILS.
6. TREES SHALL NOT BE PLANTED CLOSER THAN FOUR (4) FEET FROM ANY WALKWAY OR PUBLIC SIDEWALK EXCEPT WHERE TREE WELLS OR PARKWAYS ARE PROVIDED IN THE SIDEWALK AREA. ALL TREE PLANTED WITHIN FIVE (5) FEET OF WALKS OR PUBLIC UTILITIES SHALL RECEIVE DEEP ROOT BARRIERS.
7. TREE LOCATIONS SHOWN ON PLAN MAY REQUIRE ADJUSTMENT IN THE FIELD. WHENEVER FEASIBLE, TREES SHOULD BE PLANTED A MINIMUM OF TEN (10) FEET FROM ALL UNDERGROUND UTILITIES, STREETLIGHTS, HYDRANTS, AND OUT OF DRAINAGE FLOW LINES. SHOULD THIS NOT BE POSSIBLE, CONTACT THE LANDSCAPE ARCHITECT FOR DECISION ON PLACEMENT.
8. ALL TREES IN TURF AREAS SHALL HAVE 12" MIN. CLR. CIRCUMFERENCE AROUND THE TRUNK BASE. PROVIDE 2" MIN. THK. MULCH AT BASE OF TRUNK.
9. GROUNDCOVER TYPE SHOWN SHALL BE PLANTED IN ALL SHRUB AREAS AS SPECIFIED ON PLANS. GROUNDCOVER SHALL BE PLANTED AT 8" ON- CENTER UNIFORM TRIANGULAR SPACING, AND SHALL BE CONTINUOUS UNDER ALL TREE AND SHRUB MASSES AS SHOWN ON PLAN.
10. MATURE PLANTINGS SHALL NOT INTERFERE WITH UTILITIES AND TRAFFIC SIGHT LINES.
11. ALL PLANTING AREAS SHALL BE MULCHED WITH PINESTRAW, EXCEPT FOR AREAS PLANTED WITH GROUNDCOVER. ALL AREAS PLANTED WITH GROUNDCOVER SHALL BE MULCHED WITH HARDWOOD MULCH.

*NOTE: PRIOR TO ANY CLEARING, GRADING, OR CONSTRUCTION ACTIVITY, TREE PROTECTION FENCING WILL BE INSTALLED AROUND PROTECTED TREES OR GROVES OF TREES. NO CONSTRUCTION WORKERS, TOOLS, MATERIALS OR VEHICLES ARE PERMITTED WITHIN THE TREE PROTECTION FENCING

PLANT SCHEDULE

TREES	BOTANICAL / COMMON NAME	CONT	MIN. REQ. SIZE		QTY
	Cercis c. `Forest Pansy` TM / Forest Pansy Redbud	B&B	2-2.5" CAL.		7
	Ilex x a. `East Palatka` / Single Stem East Palatka Holly	B&B	2-2.5" CAL.		15
	Quercus virginiana / Southern Live Oak	B & B	2-2.5" CAL.		13
SHRUBS	BOTANICAL / COMMON NAME	CONT	MIN. REQ. SIZE		QTY
	Aucuba j. `Gold Dust` / Gold Dust Aucuba	7 gal	12" HT		22
	Fatsia japonica / Japanese Fatsia	7 gal	12" HT		11
	Hydrangea p. `Limelight` TM / Limelight Hydrangea	3 gal	12" HT		6
	Ilex vomitoria `Nana` / Dwarf Yaupon	3 gal	12" HT		37
	Ligustrum j. `Recurvifolium` / Wax leaf ligustrum	7 gal	3` HT		38
	Ligustrum japonicum / Tree Form Ligustrum	B&B			4
	Miscanthus s. `Adagio` / Adagio Eulalia Grass	3 gal			38
	Nandina domestica / Heavenly Bamboo	3 gal			7
	Nandina domestica `Firepower` / Firepower Heavenly Bamboo	3 gal			16
	Podocarpus macrophyllus `Dwarf Pringles` / Dwarf Podocarpus	7 gal			31
GROUND COVERS	BOTANICAL / COMMON NAME	CONT		SPACING	QTY
	Liriope gigantea / Giant Liriope	1 GAL		24" o.c.	522
	Trachelospermum a. `Asiatic` / Asiatic Jasmine	1 qt		12" o.c.	577
SOD/SEED	BOTANICAL / COMMON NAME	CONT		SPACING	QTY
	Eremochloa ophiuroides / Centipede Sod	sod			

SYMBOL LEGEND

- PROPERTY LINE
- LIMIT OF DISTURBANCE
- RIGHT OF WAY
- STREETYARD
- SITE TRIANGLE
- PNE 14 — EXISTING TREES TO BE REMOVED
- TREES UTILIZED TO MEET MITIGATION REQUIREMENTS
- TREES UTILIZED TO MEET PARKING LOT SHADE REQUIREMENTS

NORTH

0 20 40 60 feet
SCALE: 1" = 20'

MIHALY LAND DESIGN
PLANNING + LANDSCAPE ARCHITECTURE
330 MILITARY CUTOFF RD., Suite A3
Wilmington, NC 28405 910.392.4355

Revisions
2021-02-15: Revised per COW Comments

CLIENT
RITZ PARTNERS 3, LLC.
1319-CC MILITARY CUTOFF RD #172
WILMINGTON, NC
PHONE: 910-538-9901

PROJECT
FRANKLIN FOREST
4912 FRANKLIN AVE. & 202 LULLWATER DR.
WILMINGTON, NC
LANDSCAPE PLAN

PERMIT PLAN

Date:	2020-11-30
Phase:	
Job Number:	101-731
Designed by:	MLD
Drawn by:	RJB
Checked by:	JWM

Sheet Title:
PLANTING PLAN

Sheet Number:
L1.0
of 1 sheets